Trio GENERATOR

VOLVO PENTA

MADE IN TURKEY

DATAKOM

D-500-LITE

INTERNET ENABLED GENSET CONTROLLER

International Organization for Standardization ISO 14001:2015

ISO 9001

OUTPUT VALUES

Standby Power	Voltage	230/400
Standby Power	kVA	385
Standby Power	kW	308
Standby Power	Amper	556
Prime Power	Voltage	230/400
Prime Power	kVA	350

Prime Power	kW	280
Prime Power	Amper	505

DIESEL ENGINE

Brand	VOLVO
Model	TAD1342GE
Max. Total Output Pow. (kWm/hp)	333/453
Cylinder Displacement (lt)	18.1
Cylinder Orientation	6 Single Line
Bore x Stroke(mm*mm)	131 x 158
Compression Ratio	18;1
Governor Type	Electronic
Rotation	1500 RPM
Aspiration System	TurboCharged-Intercooler
Injection	Direct
Cooling System	Water Cooled
Electrical System(V DC)	24
Oil Capacity (lt)	36
Engine Coolant Capacity (lt)	46
Fuel Cons. %50 (lt/h)	39
Fuel Cons. %75 (lt/h)	56
Fuel Cons. %100 (lt/h)	74

ALTERNATOR

Standby Power (kVa/kw)	385/308
Prime Power (kVa/kw)	350/280
Brand	LEROY SOMER
Output Voltage (V)	231/400
Frequency (Hz)	50
Stationary Vol. Regulation(±)	0,01
Short Circuit Current	%300 (10 sec)
Insulation	H
Protection	IP23
E ciency (%)	92
Overloading	110% for 1 hour
Power Factor (cos Q=0.8)	0,8
Tot. Harmonic Dist. Rate	<1 %
Connection Type	Star
Number of Pole	4
Number of Bearing	Single

DIMENSIONS & WEIGHT

Without Canopy	Width	1500 mm
Without Canopy	Length	3500 mm
Without Canopy	High	2200 mm
Without Canopy	Weight	2900 kg
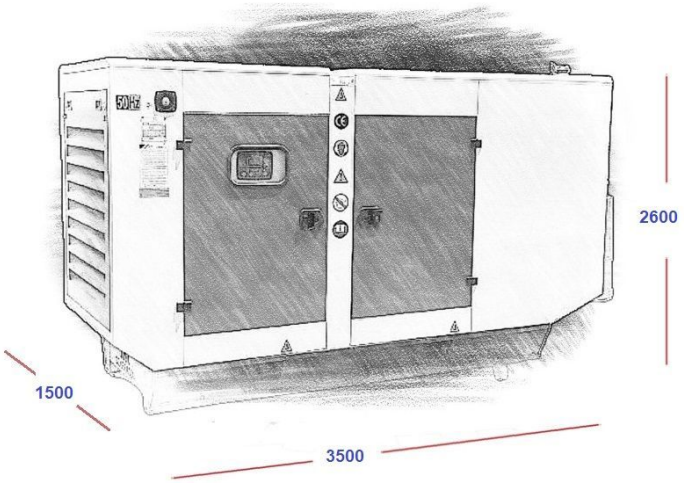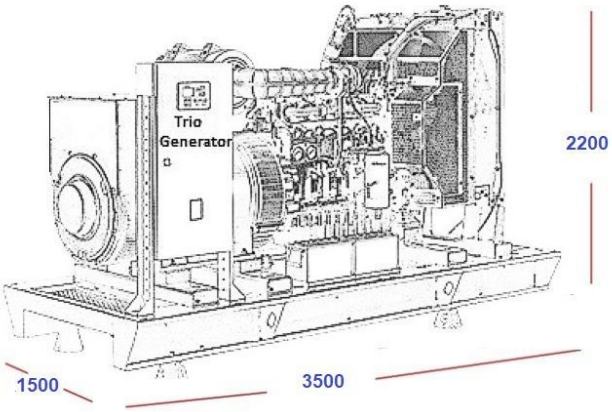
Without Canopy	Fuel Tank Capacity	660 lt
With Canopy	Width	1500 mm
With Canopy	Length	3500 mm
With Canopy	High	2600 mm
With Canopy	Weight	3500 kg
With Canopy	Fuel Tank Capacity	660 lt